HellermannTyton

MDU - S2 / AFN

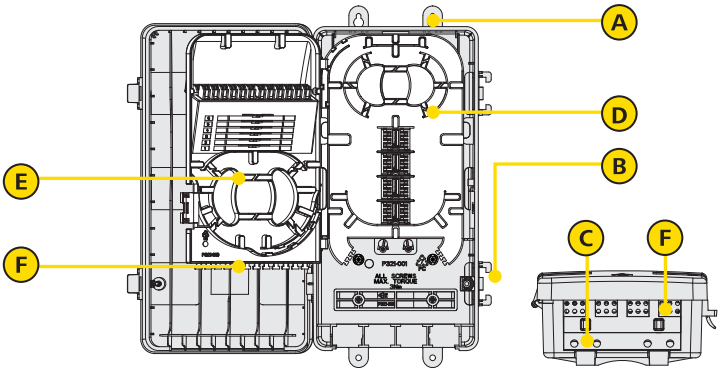

A

A1 Wall Mounted

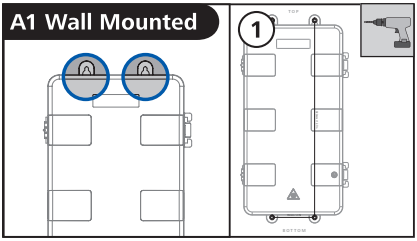

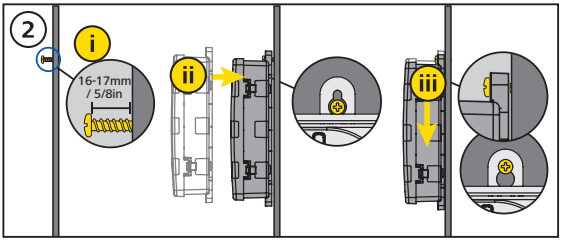

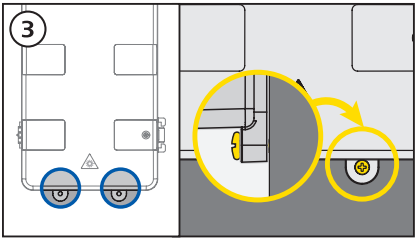

A2 Cabletie

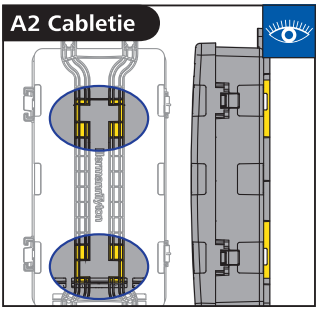

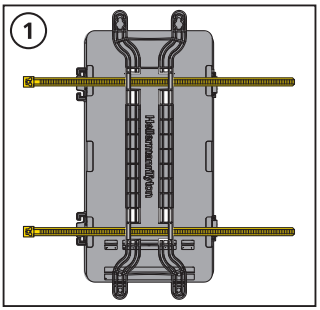

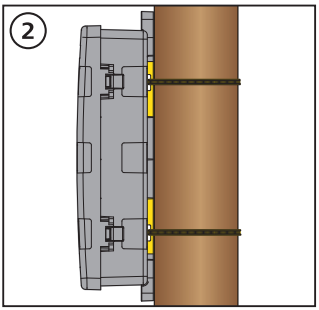

B

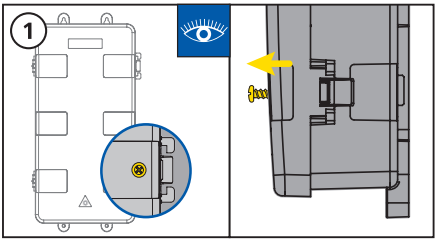

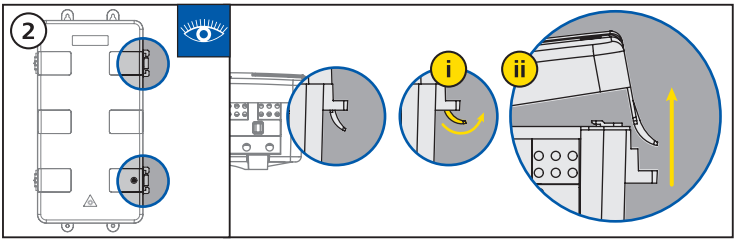

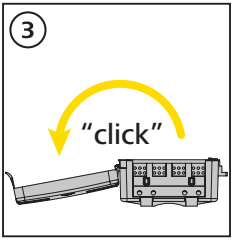

C

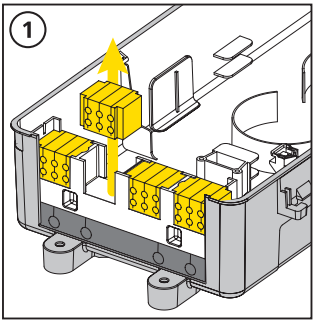

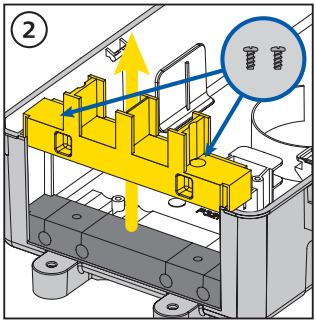

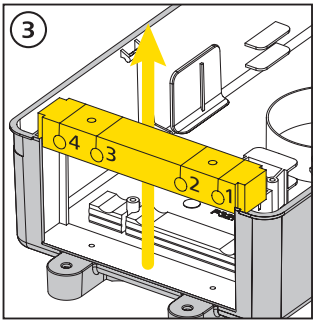

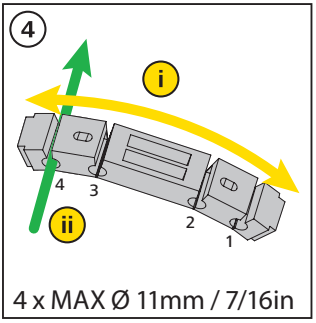

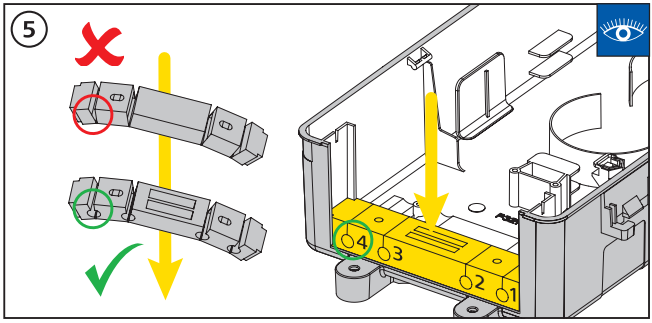

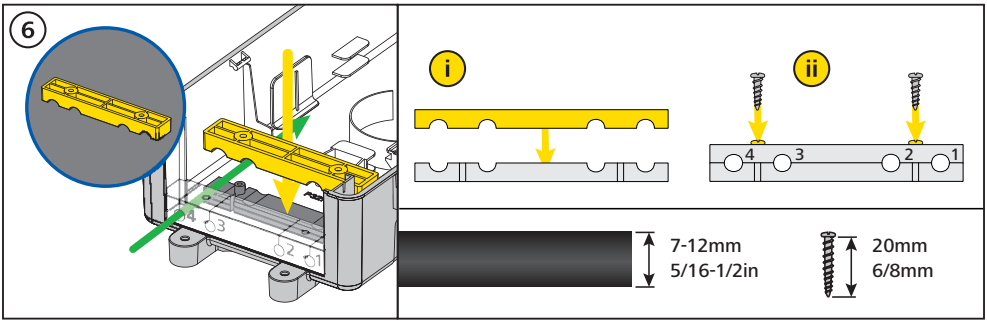
6
i
ii
4
3
2
1
7-12mm
5/16-1/2in
20mm
6/8mm

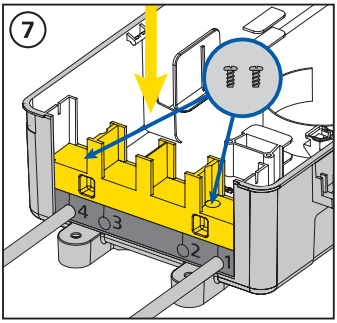
7
4
3
2
1

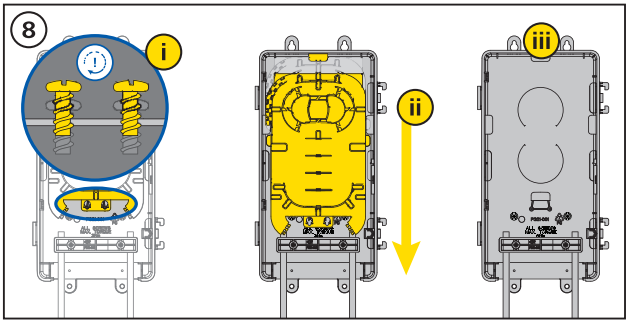
8
i
ii
iii

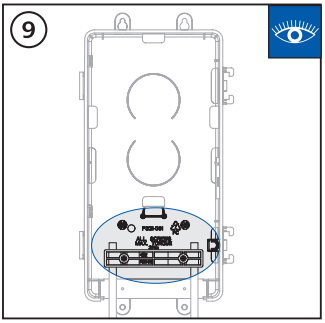
9

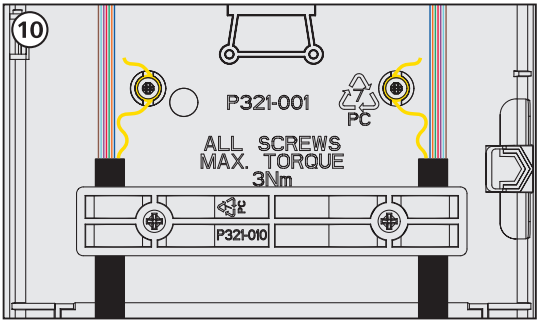
10
P321-001
PC
ALL SCREWS
MAX. TORQUE
3Nm
P321-010

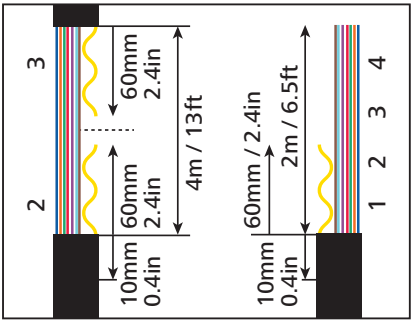
3
2
60mm
2.4in
4m / 13ft
60mm
2.4in
10mm
0.4in
60mm / 2.4in
2m / 6.5ft
10mm
0.4in
4
3
2
1

C contd.

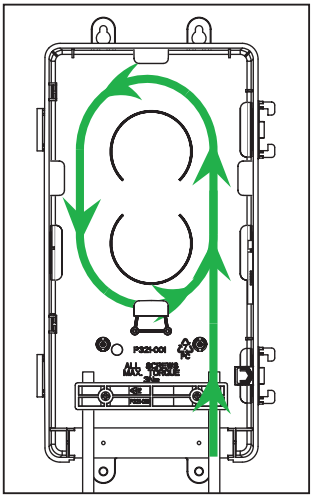

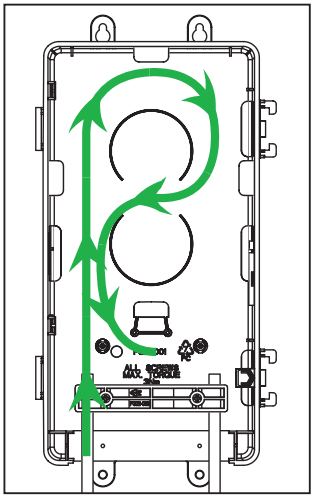

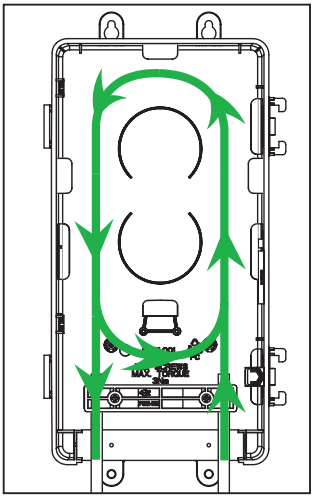

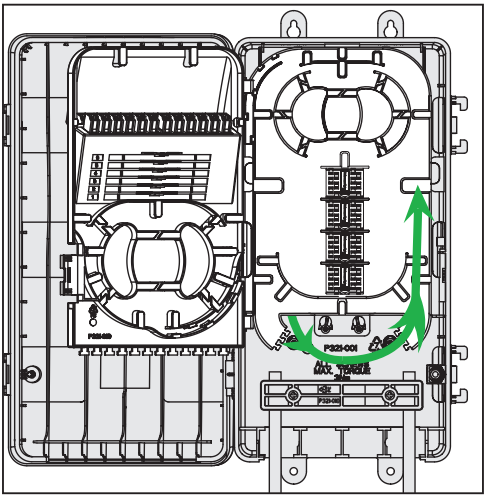

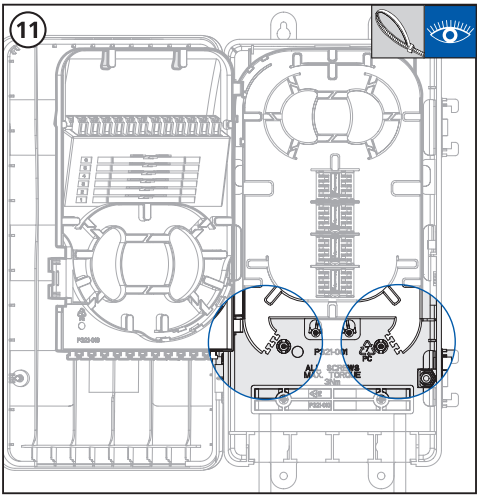

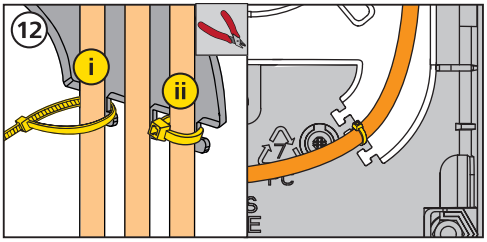

D

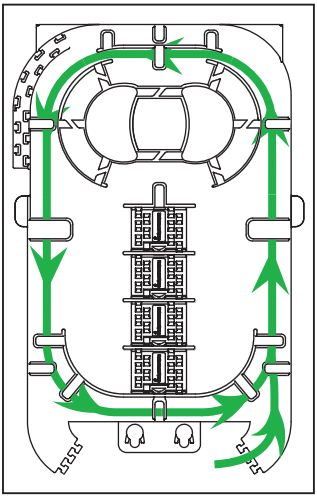

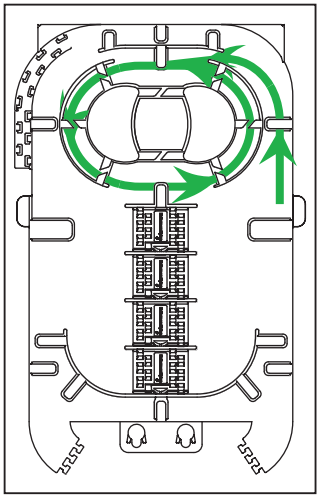

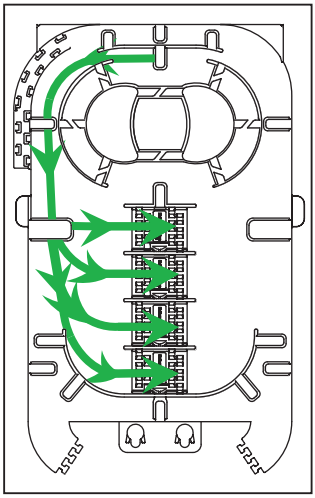

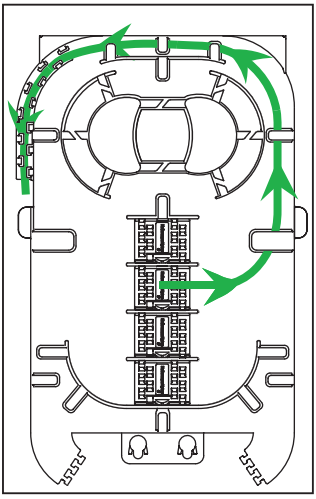

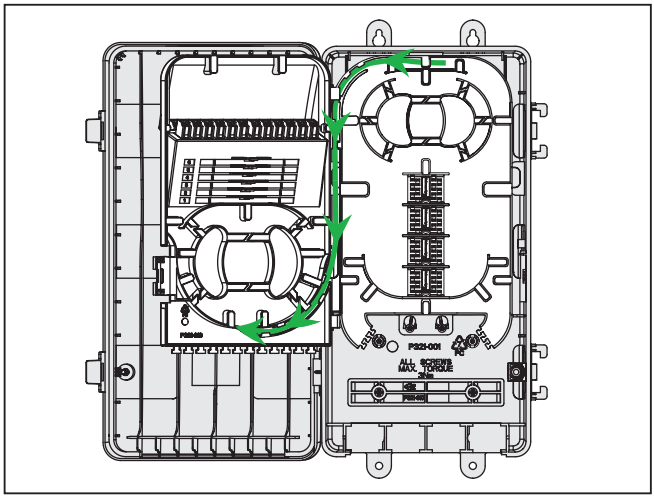

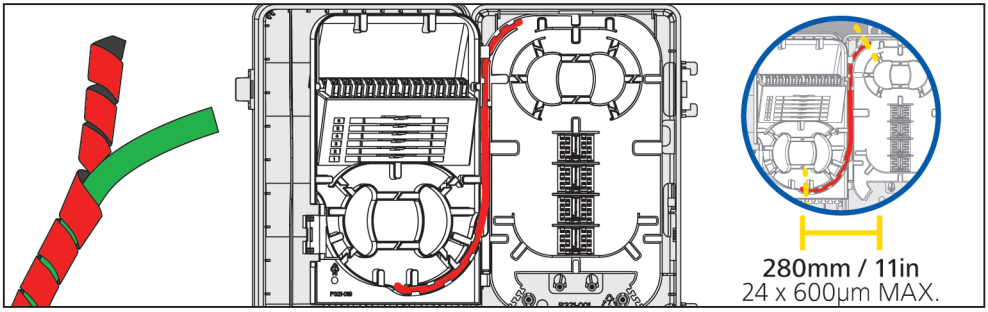

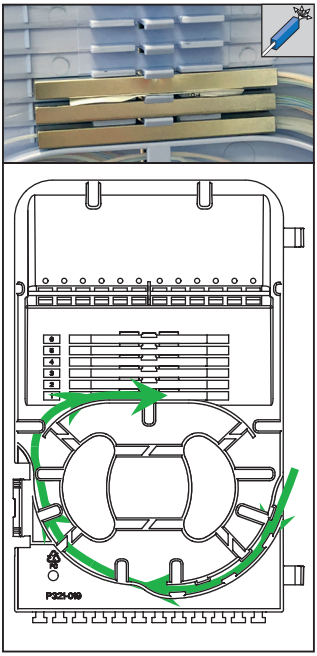
P321-019

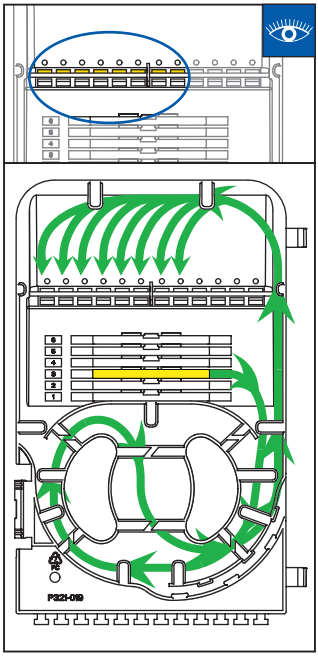
P321-019

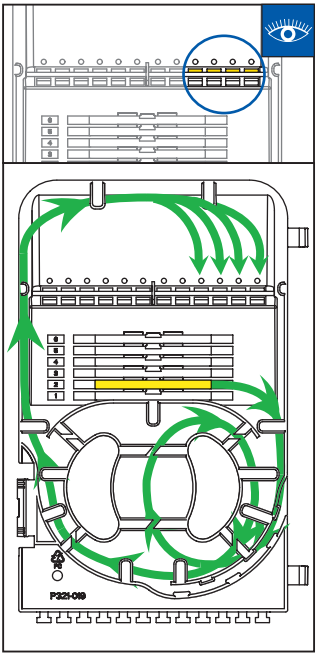
P321-019

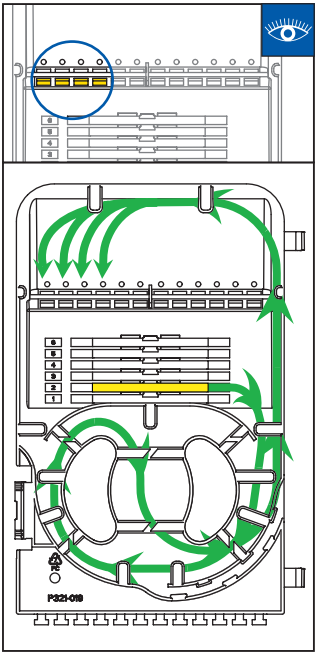
P321-019

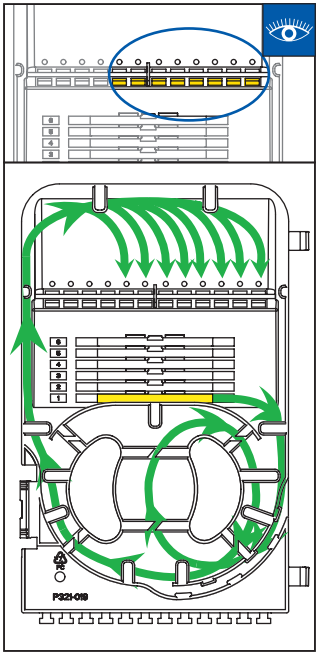
P321-019

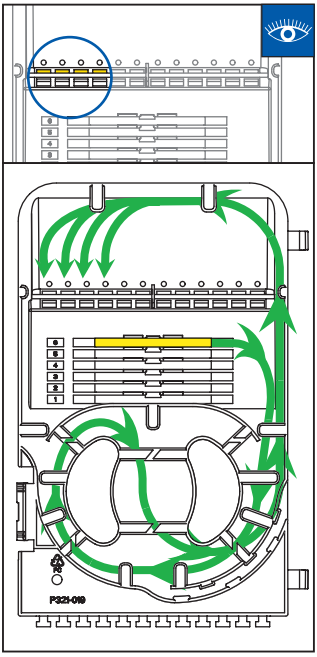
P321-019

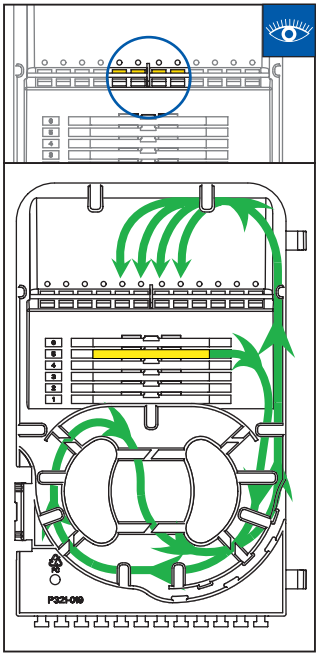
P321-019

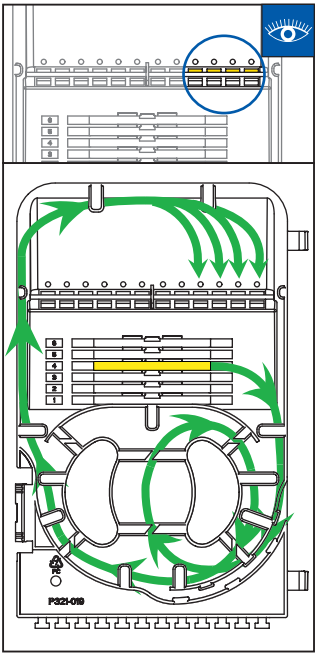
P321-019

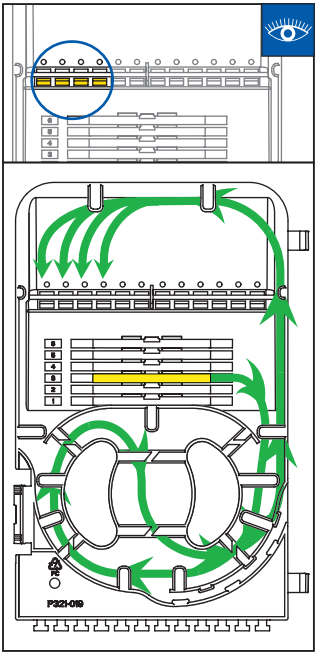
P321-019

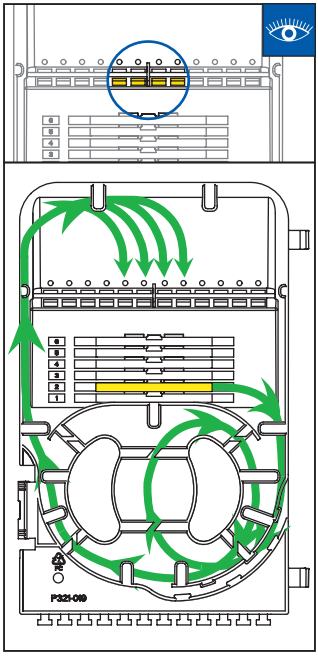
P321-019

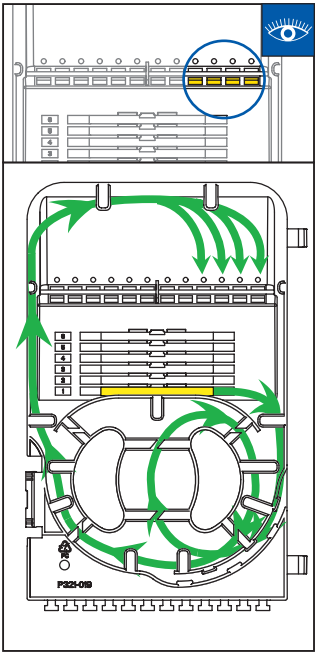
P321-019

E1contd.

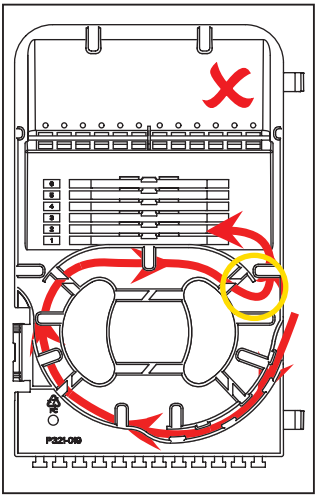

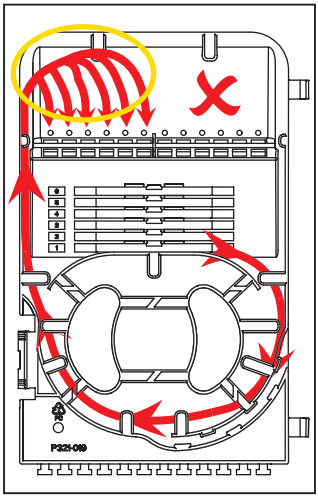

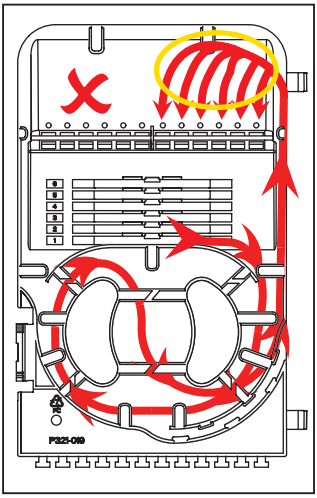

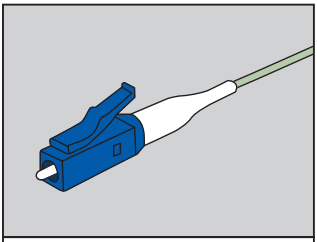

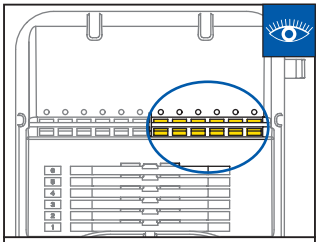

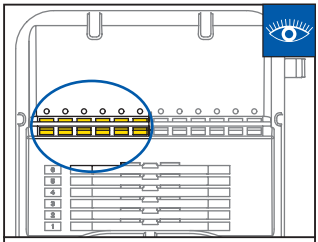

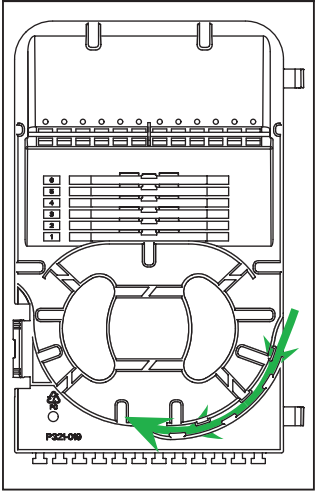
P321-019

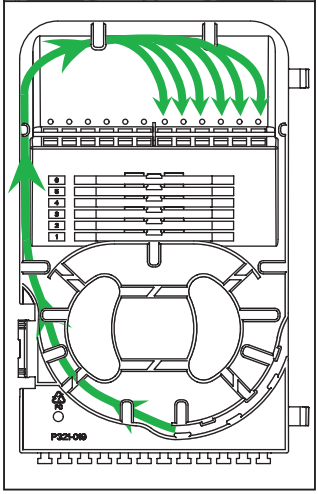
P321-019

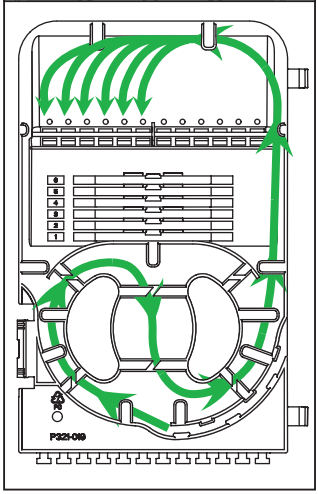
P321-019

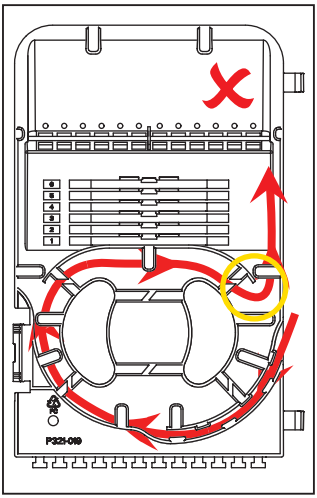
P321-019

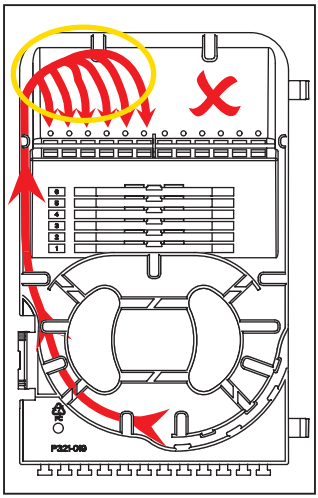
P321-019

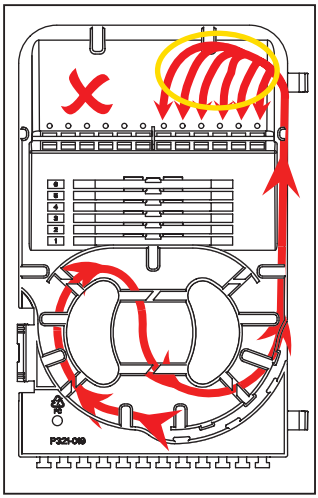
P321-019

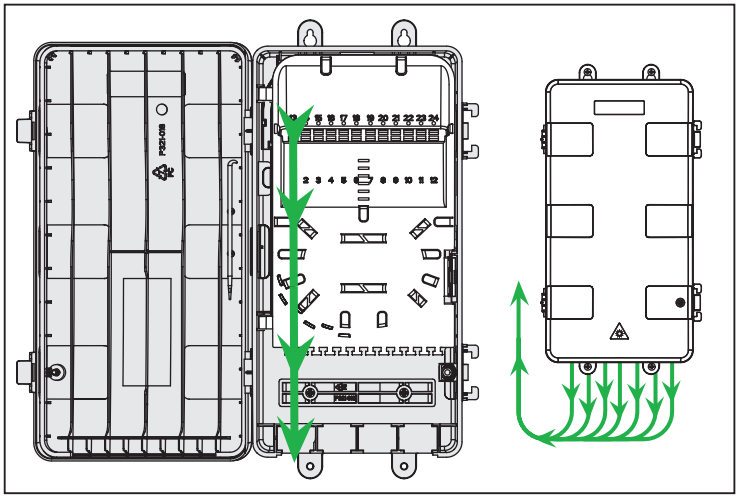

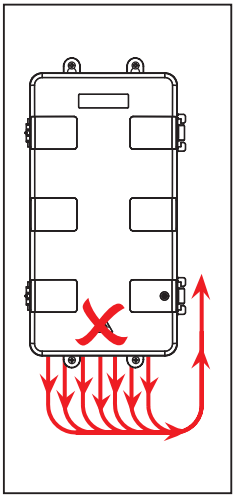

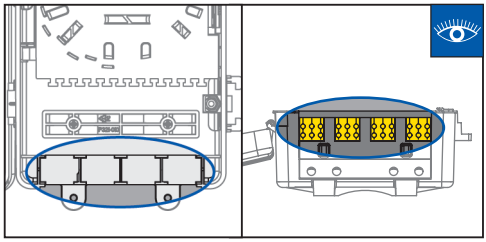

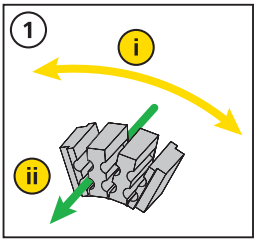
1
i
ii

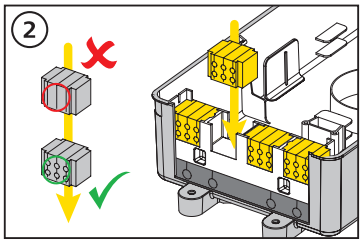
2

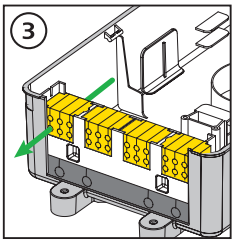
3

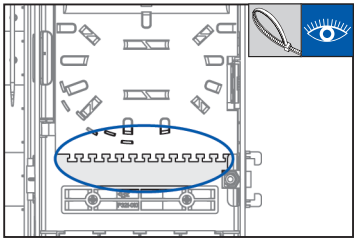

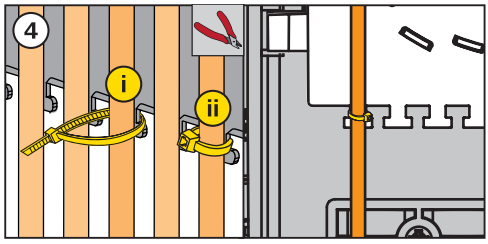
4
i
ii

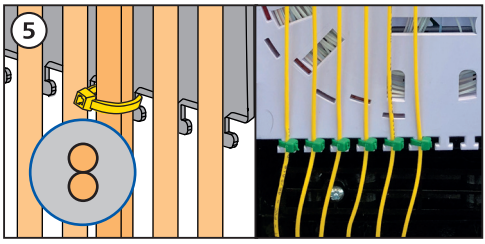
5

F contd.

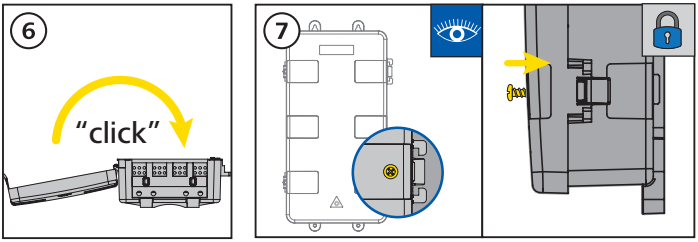

F Re-entry

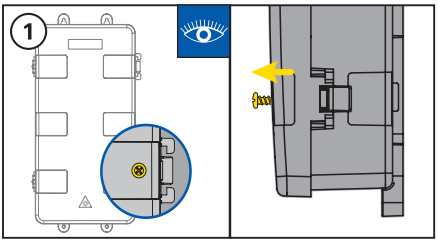

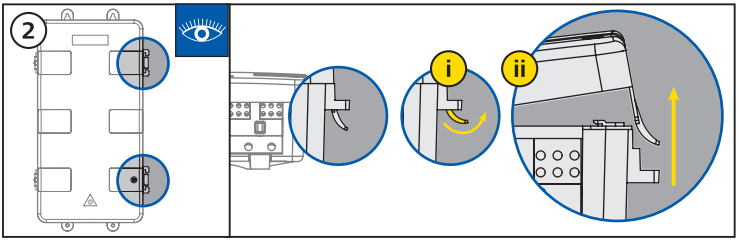

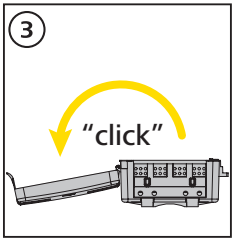

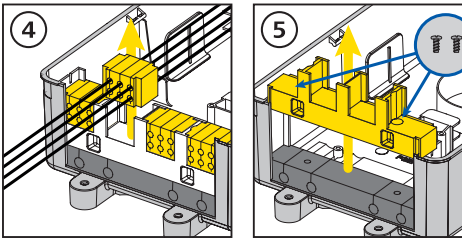

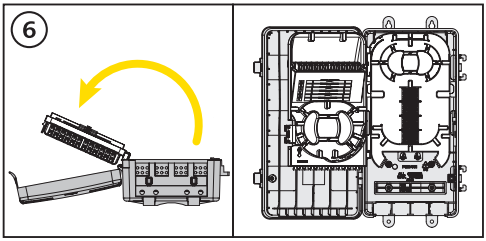

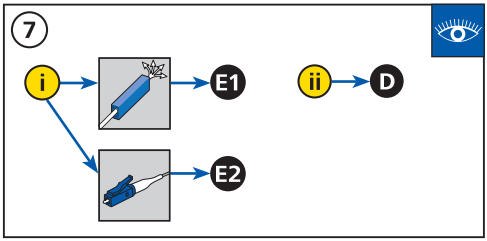

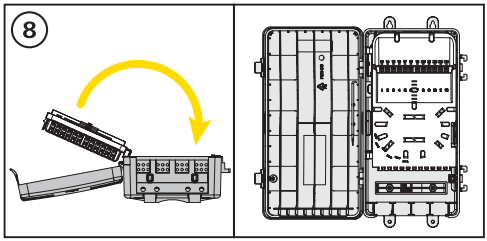

F Re-entry

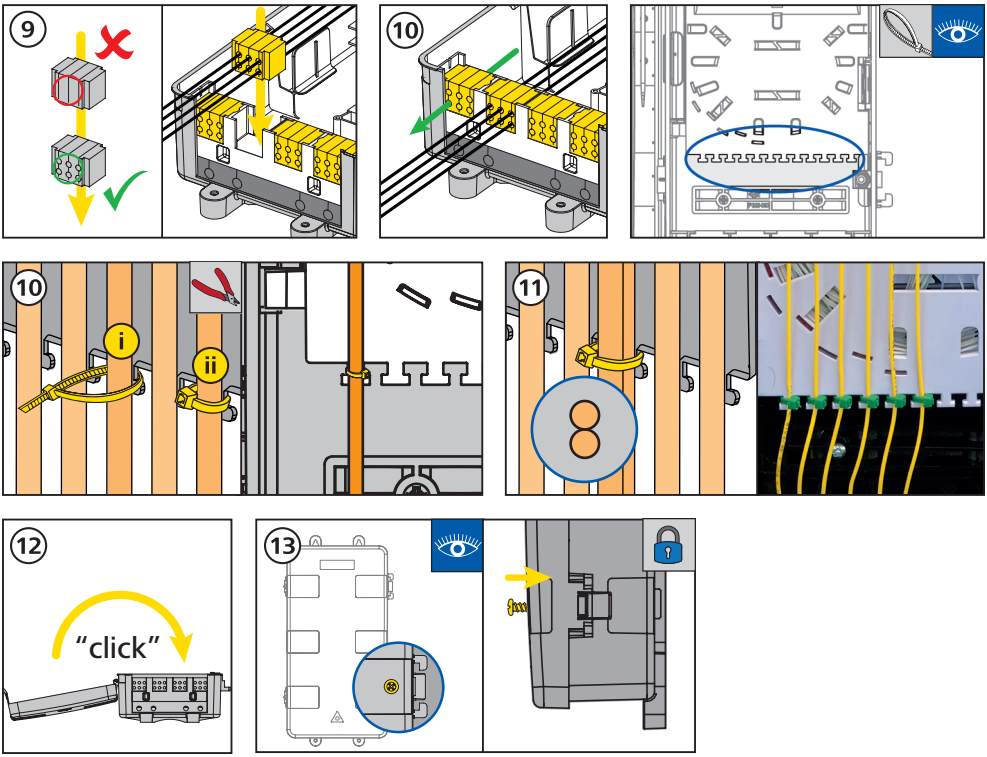

HellermannTyton

HellermannTyton Data Ltd – UK
Tel: +44 (0) 1604 706633
www.htdata.co.uk

HellermannTyton – USA
Tel: 800 537 1512
www.hellermann.tyton.com